Model
700TWA
PRAIRIE DOG

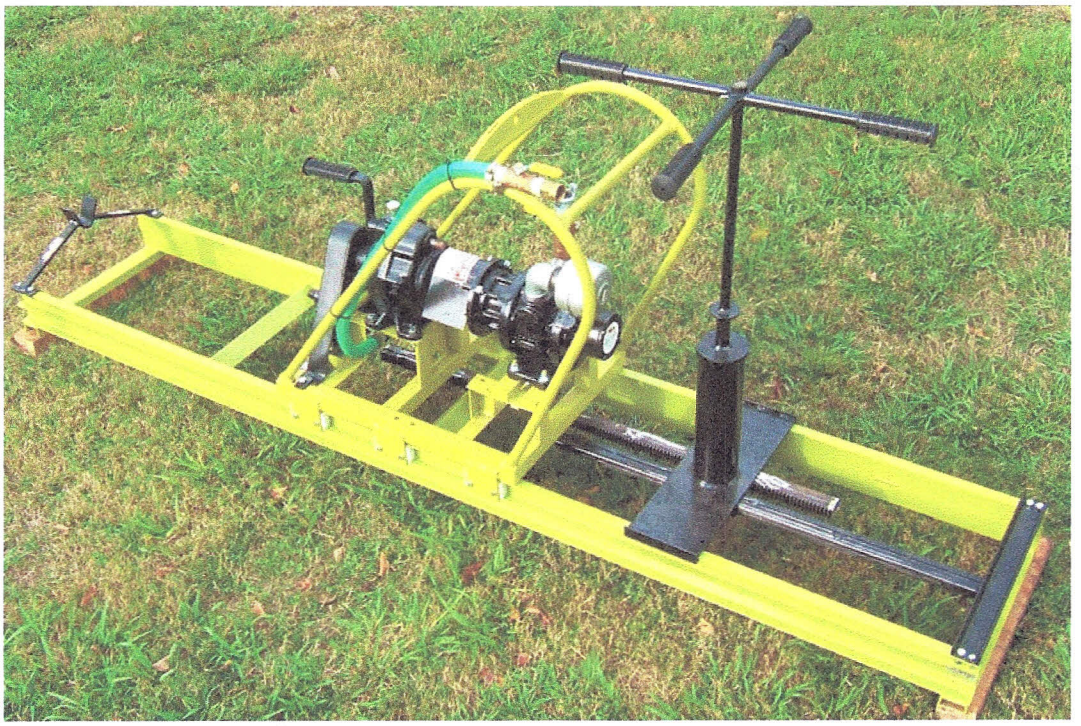

PRAIRIE DOG BORING EQUIPMENT INC.
10006 AIRLINE DRIVE
HOUSTON, TEXAS 77037
(281) 448-8442 OR 800-631-3786

GENERAL SAFTEY WARNINGS

WARNING:

WEAR SAFETY GLASSES AT ALL TIMES

READ THE OPERATING INSTRUCTIONS INCLUDED WITH ANY AIR POWERED COMPONENTS BEFORE USING THEM.

DISCONNECT THE POWER SUPPLY BEFORE ANY MAINTENCE WORK IS PERFORMED ON ANY PNEUMATIC EQUIPMENT. ALL ELECTRICALLY RELATED MAINTENCANCE WORK SHOULD BE PERFORMED BY A QUALIFIED ELECTRICAN.

OPERATORS OF ANY PNEUMATIC POWER SUPPLY EQUIPMENT OR OPERATORS OF EQUIPMENT POWERED BY AIR, MUST BE KNOWLEDGEABLE OF THE APPROPRIATE EQUIPMENT OPERATION AND THE HAZARDS PRESENTED BY MISUSE OR INCORRECT APPLICATION.

DISCHARGED AIR UNDER PRESSURE CAN HAVE SUFFICIENT FORCE TO PENETRATE THE SKIN AND CAUSE SERIOUS PERSONAL INJURY. BE CAUTIOUS OF POTENTIAL MATERIAL SUSPENDED IN AIR SUPPLIES SUCH MATERIALS CAN BECOME PROJECTILES AND CAN CAUSE SERIOUS INJURY. IN INJURY DOES OCCURE, SEEK MEDICAL ATTENTION IMMEDIATELY.

BORING MACHINES CAN BE DANGEROUS IF OPERATED IMPROPERLY

SO FOLLOW THESE

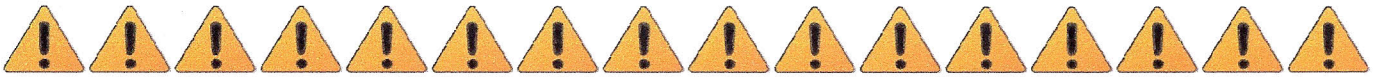

SAFETY INSTRUCTIONS

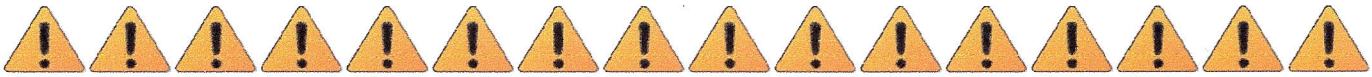

1. **Only the OPERATOR should be allowed near the machine.**

2. **NEVER STAND or allow anyone else to stand bear the boring machine when rotating.**

3. **KEEP ALL GUARDS and shields in place while machine is running.**

4. **SHUT OFF ENGINE before leaving machine.**

5. **ALWAYS STOP engine before servicing machine.**

6. **REMOVE KEY or spark plug wire when leaving machine unattended**

7. **ALLOW ENGINE TO COOL before refueling**

8. **WEAR TIGHT FITTING CLOTHES when using boring machines and keep your hands, feet, and clothing away from moving parts.**

9. **KNOW what is down there before you bore. If necessary, get clearance from the phone company, power company, community water and sewer departments.**

10. **MOVE SLOWLY when starting to bore.**

11. **USE THE BUDDY SYSTEM Do not work alone in isolated areas**

*** SPECIAL CAUTION ***

12. **ALWAYS, ALWAYS, ALWAYS stay at the controls of the machine. You may have to stop suddenly to avoid danger. Staying at the controls will also keep you away from the dangerous part of the machine.**

PLEASE observe these instructions. They are considered common sense by professional boring contractors. There is just no substitute for a careful, safety minded operators SERIOUS INJURY OR DEATH COULD RESULT FROM FAILURE TO FOLLOW THESE SUGGESTIONS.

!!!! CAUTION !!!!

NEVER WORK ON PRESSURE LINES!
NEVER SERVICE MACHINE WHILE MACHINE IS RUNNING!
KEEP ALL GUARDS IN PLACE FOR YOUR PROTECTION!
NEVER OPERATE EQUIPMENT WHEN IT IS DAMAGED OR MODIFIED!

THINK SAFETY FIRST !!!

NOTICE

FOR PROPER PERFORMANCE
AND TO PREVENT DAMAGE

SPECIFICATIONS

INPUT

80 TO 100 PSI MAXIMUM
100 TO 150 CFM MAXIMUM
OPTIMUM SETTING- 90PSI @ 100CFM

PRAIRIE DOG BORING MACHINE

NO REGISTRATION (WARRANTY) CARD IS NECESSARY TO OBTAIN WARRANTY ON PRAIRIE DOG BORING MACHINE. FILL IN THE REQUIRED INFORMATION AND REQUIRED INFORMATION AND RETAIN FOR YOUR RECORDS.

Prairie Dog Boring Machine: Serial No. _____ Model No. _____
Dealer Purchased from: _____ Date: _____

If warranty service is needed, contact your nearest authorized dealer or Prairie Dog Boring Equipment , Inc. For prompt attention our service department will need to know the trouble experienced and the total number of hours the boring machine has been operated. If you differ with the decision of our service department on warranty claim, ask your service department to submit all supporting facts for our review. If Prairie Dog Boring Equipment, Inc. decides that your claim is justified, you will be fully reimbursed for those items accepted as defective.
To avoid misunderstandings which might occur between boring machine owners and Prairie Dog Boring Equipment, Inc., we are listing causes of boring machine failures, where repair or replacement is NOT covered by Prairie Dog Boring Equipment, Inc. warranty.

ABUSE OR NEGLECT

1. Parts which are scored or broken because the machine was operated without sufficient lubricating oil or the power grade of oil are not covered by warranty. Check oil level at least every five hours, and refill when necessary. Change oil as recommended.

2. Damage or wear caused by dirt which enters the machine because of improper maintenance is not covered by warranty. Clean and re-oil regularly.

3. Warranty does not cover the adjustment of the machine unless the need for such repair is the result of defects in material or workmanship or both. Minor adjustment are NOT covered by warranty.

4. Broken parts which result from improper operation, overspending, or abuse in operation are covered by warranty.

5. Repair or adjustment of associated parts which are not of Prairie Dog Boring Equipment, Inc. manufacture will be covered by Prairie Dog Boring Equipment, Inc. warranty.

6. Only ORIGINAL PRAIRIE DOG BORING EQUIPMENT, INC. PART OR PARTS APPROVED PRAIRIE DOG BORING EQUIPMENT, INC. may be covered by warranty.

7. About improvements: Prairie Dog Boring Equipment, Inc. is continually striving to improve its products, therefore, reserve the right to make improvements or changes when it becomes practical to do so, without incurring and obligations to make changes or additions to the equipment sold previously.

WARRANTY IS AVAILABLE ONLY THROUGH SERVICE CENTERS OR SERVICE DEPARTMENT WHICH HAVE BEEN APPROVED AMD AUTHORIZED BY PRAIRIE DOG BORING EQUIPMENT, INC.

Prairie Dog Boring Equipment, Inc.

Limited Warranty

To the original purchaser for 1 year from purchase date we will repair or replace at our option and free of charge any parts found to be defective under normal use and service resulting from defects in material and/or workmanship after an examination at our factory in Houston, Texas.

All transportation charges, damages, and loss incurred in connection with the transportation of all parts for inspection, replacement, or repair under this warranty shall be borne by the purchaser.

The express warranty contained herein shall not be applied to any boring machine attachment or part which has been altered in any way, nor shall such express warranty apply to any damages resulting from accident, misuse, or abuse, nor shall such express warranty apply to any damages resulting from failure to follow the Prairie Dog Boring Equipment, Inc. instruction for operation and maintenance of boring machine attachments and parts. Also, the express warranty contained herein shall not apply to engines, clutches, gearboxes, etc., which are not of our manufacture as they are covered by the design and specification changes on future machines without notice and without obligation on our part to present owners.

The foregoing express warranty is in lieu of all other express warranties. Prairie Dog Boring Equipment, Inc. neither assumes nor authorizes any other person, natural or corporate, to assume for it any other obligation or liability in connection with or with respect to any boring machine attachments or parts.

Prairie Dog Boring Equipment ,Inc. hereby disclaims any and all implied warranties, including, but not limited to warranties of merchantability and fitness for any particular purpose, if and to the extent, but only if and to the extent, that such disclaimer is not forbidden by any applicable law and any implied warranties, including, but not limited to which Prairie Dog Boring Equipment ,Inc. is so forbidden to disclaim by any applicable law, are limited to the periods of the express warranty as defined in the first paragraph of this warranty. Prairie Dog Boring Equipment ,Inc. shall in no event be liable for any consequential, incidental or special damages, and/or expenses.

PRAIRIE DOG SUGGESTED OPERATIONS & PROCEDURES

FOR MODEL'S UG800TW, UG900TW, UG1200TW, AND UG700TWA

FIRST, LET ME SAY THAT THE OPERATION OF THE MACHINE BY VARIOUS OWNERS IN NUMEROUS SOIL CONDITIONS CAN VARY TREMENDOUSLY. THESE PROCEDURES ARE GIVEN AS GUIDELINES. MANY USERS FIND IT EASIER TO USE OTHER METHODS OF THEIR OWN MAKING.

THE HOLE

FIRST, YOU NEED A BORE PIT TO SET THE MACHINE AT THE DESIRED DEPTH OF DRILL ROD ENTRY. THE DIMENSIONS OF THE PIT NEED TO BE A MINIMUM OF 20" WIDE AND 8' LONG. WHERE THE PILOT LEAVES THE BORE HOLE(COMMONLY CALLED A COME-OUT HOLE) YOU WILL NEED A SECOND BORE PIT. THE DIMENSIONS NEED TO BE MINIMUM OF 20" WIDE AND 10' LONG. THIS PIT BEEDS TO BE AT THE DESIRED DEPTH OF INSTALLATIONS OF YOUR PIPE, WIRE OR OTHER UNDERGROUND UTILITY EQUIPMENT. (SEE FIG. 2-A)

THE LINE UP

SET THE MACHINE IN THE BORE PIT ON LEVEL TO ENSURE STRAIGHT BORES. (SEE FIG. 1-C) AFTER INSTALLING YOUR FIRST DRILL STEM TO THE "PRAIRIE DOG" HORIZONTAL EARTH BORING MACHINE, USE A LEVEL ON TOP OF THE DRILL STEM TO FURTHER ENSURE THE BORE WIL BE ON GRADE. (SEE FIG. 1-D) TWO STAKES IN EACH BORE PIT ATTACHED TOGETHER WITH STRING CAN ALSO PROVIDE A STRAIGHT LINE REFERENCE FOR BORES. (SEE FIG. 2-A) NEXT LAY YOUR PIPE OUT FROM BORE PIT TO HELP GUAGE YOUR DISTANCE. WHEN THE LAST SECTION OF PIPE IS ADDED FOR DRILLING, YOU SHOULD BE ABLE TO SEE IT IN THE COME-OUT HOLE.

WATER

THE EASIEST APPLICATION IS OF COURSE FROM AN EXISTING WATER SOURCE USING A COMMOMN GARDEN HOSE. IF A WATER SUPPLY IS NOT AVAILABLE , TANKS AND DRUMS, WITH THE ADDITION OF A WATER PUMP THAT CAN MAINTAIN A WATER PRESSURE OF 35 TO 40 POUNDS IS ALL THAT IS NECESSARY. THE AMOUNT OF WATER NEEDED FOR YOUR SPECIFIC SOIL CONDITIONS CAN VARY, BUT IN NORMAL CONDITIONS A 55 GALLON DRUM OF WATER IS SUFFICIENT TO BORE 2" HOLE 30 FEET.

DRILLING

INSTALLTHE PILOT BIT TO YOUR FIRST DRILL STEM, START THE MOTOR, ENGAGE THE CLUTCH, AND TURN THE WATER ON TO ENSURE THE PILOT BIT IS FREE OF ANY OBSRUCTIONS. THE MACHINE ADVANCES WHEN THE HADLE IS MOVED FORWARD AND

BACK. THE CAM (PART NO. PDP964) TURNS ON THE TRACK TO ALLOW MOVEMENT. ENOUGH PRESSSURE SHOULD BE APPLIED TO THE HANDLE ADVANCING SYSTEM TO ALLOW SMOOTH EASY OPERATION. IF TOO MUCH PRESSURE IS APPLIED, THE WATER WILL NOT BE ABLE TO MOVE THROUGH THE DRILL BIT EASILY, AND CAUSE THE PILOT BIT TO BECOME CLOGGED. IF THIS HAPPENS, STOP THE ADVANCING SYSTEM AND THE WATER SHOULD UNCOG THE BIT MOMENTARILY. TO HELP GUAGE THIS, A SMALL AMOUNT OF WATER SHOULD BE COMING OUT OF THE HOLE AT ALL TIMES TO ENSURE GOOD WATER CIRCULATION. (SEE FIG. 1-E) ADD THE DRILL RODS, STEM BY STEM UNTIL YOU'RE IN THE COME-OUT HOLE.

BACKREAMERING

DRILL A HOLE 2" BIGGER THATN YOUR PIPE, OR OTHER UNDERGROUND UTILITY MATERIAL, WHICH WILL ALLOW FOR EASE OF INSTALLAION. REMOVE THE PILOT BIT AND INSTALL THE PROPER SIZE BACKREAMER. THE ADDITON OF A CABLE SWIVEL AND CABLE CAN BE USED TO PULL BACK A PLUG TO SWAB THE HOLE, OR OTHER MATERIALS.

WHEN DRILLING BE SURE NOT TO FORCE THE MACHINE. THE CAM LEVER ACTION HAS MORE POWER THAN YOUR NORMALLY NEED. IT IS BEST TO BORE WITH SLOW STEADY FORCE. WITH THE ADDITION OF WATER, THE SOIL NEEDS TO BE SIMILAR TO THE CONSISTANCY OF A THICK MALT. THIS DESIRABLE FOR TWO REASONS: THE MIXTURE KEEPS THE HOLE OPEN SO IT WILL NOT CAVE IN, AND ALLOWS THE PIPE, WIRE OR PLU TO BE

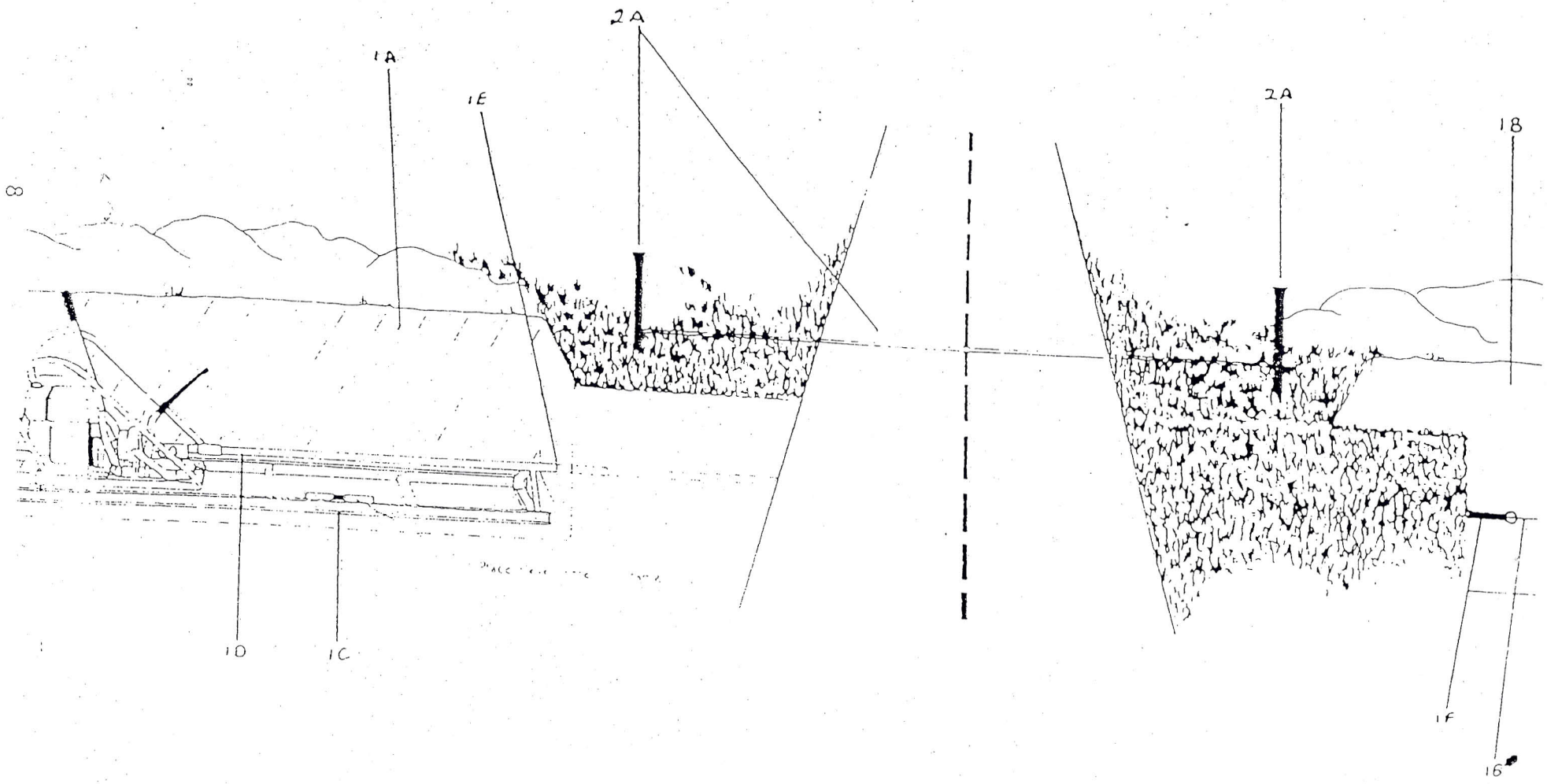
8
1A
1E
2A
1D
1C
2A
1B
1F
1G

OPERATING AND MAINTENANCE INSTRUCTIONS

CONSTRUCTION

Your air motor is a precision built rotary type motor. The vanes take up their own wear and will last 5,000-15,000 hours depending upon speed, method of oiling, operating pressure. And the precautions taken in maintaining the motor. The type of shaft seal used does not lend itself to operating pressures above 100 P.S.I. (6.89 Bar-Metric). The air motor is cooled by expanded air and can, therefore, be used in ambient temperatures up to 250F

INSTALLATION

The muffler is shipped with the air motor, but not installed. Install a moisture trap and filter in the air line ahead of motor. For efficiency of output and control of speed, use air lines the same size or in the next pipe size larger than the intake port of the motor. A single rotation motor will operate properly in only one direction. A reversible motor will work equally well in both directions. A 4-way valve which can be connected by piping to both air ports of the motor will make reversing possible. When coupling or connecting the motor to a driven member, avoid any end or side thrust on the shaft and especially **do not hammer on shaft itself or on the coupling or pulley you might attach.**

LUBRICATION—USE A DETERGENT SAE # 10 AUTOMOTIVE ENGINE OIL (PDPAD220)

An automatic air line lubricator, must be installed in the air line just ahead of the air motor. The lubricator should be adjusted to feed one drop of oil for every 50-75 CFM of air going through the motor. Air consumption figures for various models at various speeds and air line pressures can be obtained from your local dealer. Lubrication is necessary for all internal moving parts and rust prevention. Excessive moisture in the air line can cause rust formation n the motor and might also cause ice to form in the muffler due to expansion of air through the motor. The moisture problem can be corrected by installing a moisture separator in the line and also by installing an aftercooler between the compressor and air receiver.

OPERATION

The starting torque is less thatn the running torque and could vary depending on the position at which the vanes stop in relation to the air intake port. The speed and torque can be regulated by using a pressure regulator or a simple shut-off valve to obtain desired power and conserve air. CAUTION: DO NOT ALLOW THE AIR MOTOR TO "RUN FREE" AT HIGH SPEEDS WITH NO LOADS. Excessive internal heat

build up, loss of internal clearances and rapid motor damage will result. (See Table # 3 for air motor limitations).

Servicing

If the motor is sluggish or inefficient try flushing with solvent*. To flush a unit, disconnect air line and muffler and add several teaspoons of solvent directly into the motor. Rotate the shaft by hand in both directions for a few minutes, reconnect the air line and slowly apply pressure until there is no trace of solvent in exhaust air. Flush unit in a well ventilated area. Relubricate the motor with a squirt of oil in the chamber. If the vanes need replacing or foreign materials are present in motor chamber, an experienced mechanic may remove the end plate opposite the drive shaft end. DO NOT PRY WITH A SCREWDRIVER. It will dent the surface of the plate and body causing leaks. A puller tool should be used which will remove the end plate while maintaining the position of the shaft. New vanes should have the edge with corners cut on angle or the notched edge(if reversible) towards the bottom of the vane slot.

Hazard Prevention

*Recommended solvent for air motors and lubricated pumps is Flushing Solvent Part # (PDPAH255), Dem-Kote 2X276, Loctite Safety Slovent, Inhibisol Safety Slovent, Dow Chemical Chlorothane or any nontoxic, nonflammable Industrial Cleaning Solvent.

WARNING: To prevent explosive hazard DO NOT drive this air motor with combustible gases. Injury and/or property damage will result.

WARNING: DO NOT USE KEROSENE OR OTHER COMBUSTIBLE SOLVENTS.

WARNING: Eye protection is REQUIRED. Keep face away from exhaust port and do not flush unit with flammable solvent.

WARNING: Foreign material exiting the air motor can be hazardous.

CAUTION: Do not drive the air motor in excess of the recommended speeds.

IF UNIT REQUIRES MORE THAN INSTALLATIONS OF A SERVICE KIT, IT IS USUALLY QUICKEST AND LEAST EXPENSIVE TO SEND THE UNIT IN FOR REPAIR.

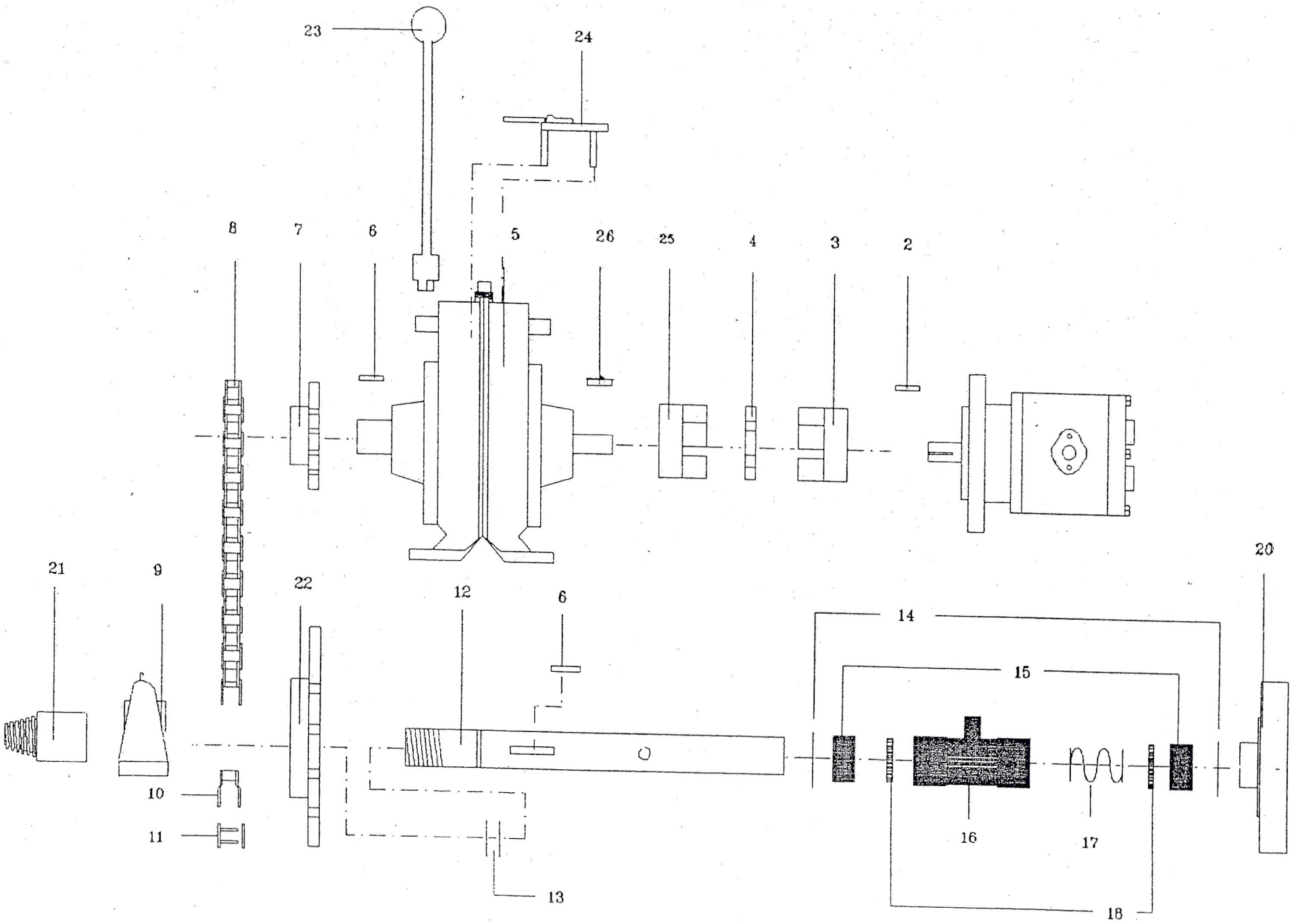
23
24
8
7
6
5
26
25
4
3
2
21
9
22
12
6
14
15
20
10
11
16
17
13
18

MODEL 700TWA PART LIST

REF #	PART #	DESCRIPTION	QTY. REQ.
01	PDP760	AIR MOTOR	1
02	PDP971-2	KEY	1
03	PDP1394	COUPLING	1
04	PDP1395	SPIDER	1
05	PDP707	TRANS ASSY	1
06	PDP971-2	KEY	2
07	PDP1316	SPROCKET	1
08	PDP1314	DRIVE CHAIN	1
09	PDP910	BEARING ASSY	1
10	PDP1312	OFFSET LINK	1
11	PDP1313	CONN. LINK	1
12	PDP1571	WATER SWIVEL SHAFT	1
13	PDP971-3	SNAP RING	1
14	PDP916-5	SNAP RING WATER SWIVEL	1
15	PDP916-2	BUSHING	1
16	PDP916-1	WATER SWIVEL BODY	1
17	PDP916-4	SPRING	1
18	PDP916-3	U CUP WATER SWIVEL	1
19	PDP750	FITTING 90 DEG.	1
20	PDP706	REAR BEARING	1
21	PDP1571-2	ADAPTER WATER SHAFT	1
22	PDP1315	SPROCKET	1
23	PDP1305	HANDLE TRANS	1
24	PDP1399	HINGE LOCK	1
25	PDP1394	COUPLING	1
26	PDP718	KEY	1
27	PDP752	PIPE NIPPLE	1
28	PDP754	MUFFLER AIR MOTOR	1
29	PDP756	VALVE AIR	1

* optional equipment
** assy/ individual componets listed seperatly
*** as required

Copyright 2004 All Rights Reserved

MODEL 700TWA PART LIST

REF NO.	PART #	DESCRIPTION	QTY. REQ.
01	PDP1422	ENG FRAME 700	1
02	PDP1369	RATCHET HANDLE WE	1
03	PDP1398	CHAIN GUARD	1
04	PDP910-1	BEARING SPACE ROBIN	1
05	PDP1397TA	COUPLER GUARD	1
06	PDP758	FRAME/MOTOR CROSS MEMBER	2
07	PDP762	FRAME/MOTOR SUPPORT PLATE	2
08	PDP4164-0	GEAR RACK	2
09	PDP911	GLIDE	4
10	PDP4164-2	PINION GEAR	1
11	PDP942	SHAFT	1
12	PDP943	HANDLE	1
13	PDP944	TUBE	1
14	PDP921	DRILL STEM HOLDER	1
15	PDP1317	GLIDE TRACK	1
16	PDP945	HOUSING	1
17	PDP1398-1	CHAIN GUARD CLIP	2
18	PDP946	BOTTOM PLATE	1
19	PDP913	VALVE	1
20	PDP913-1	HOSE GASKET	3
21	PDP914-2	FM HOSE END	2
22	PDP914-2	"O" CLAMP	2
23	PDP914-1	HOSE RUBBER ONLY	1
24	PDP912	WATER HOSE ASSY.	**
25	PDP947	TOP PLATE	1
26	PDP202023	BEARING	2

* OPTIONAL EQUIPMENT
** ASSY/ INDIVIDUAL COMPONENTS LISTED SEPERATED
*** AS REQUIRED

MODEL 700TWA PART LIST

REF #	PART #	DESCRIPTION	QTY. REQ.
	PDP1402	SET SCREW	***
	PDP1402-1	SET SCREW	***
	PDP1460-2	SHIMS	***
	PDP700AM	MANUAL	***
	PDP707-1	PIPE PLUG	***
	PDP914-3	HOSE BIB TO 3/4 NPT ADT	***
	PDP914-5	BARB TO NPT ADAPTER	***
	PDP916	WATER SWIVEL ASSY	**
	PDP916-6	SWIVEL KIT	**
	PDP919	CABLE TIE	***
	PDP920	GREEN PAINT QT.	***
	PDP970-1	FRONT PULL BAR	*

* optional equipment
** assy/ individual componets listed seperatly
*** as required

REVERSING TRANSMISSION

1. WARRANTY

THE COMPANY'S PRODUCTS ARE GUARANTEED TO BE MADE OF THE FIRST CLASS MATERIAL, AND IN A SKILLFUL AND WORKMANLIKE MANNER, AND TO BE IN PERFECT RUNNING ORDER AT THE TIME THEY LEAVE THE FACTORY. THEY ARE GUARANTEED AGAINST ANY DEFECTIVE MATERIAL OR WORKMANSHIP, AND ANY PARTS PROVEN DEFECTIVE WITHIN TWELVE MONTHS FROM THE DATE OF SHIPMENT WILL BE REPLACED FREE OF CHAGRE, F.O.B. OUR PLANT, ON RETURN OF SUCH DEFECTIVE PART TO THE COMPANY, TRANSPORTATION CHARGES PREPAID. NO PARTS, HOWEVER, SHALL BE RETURNED WITHOUT THE EXPRESS AUTHORIZATION OF THIS COMPANY SO TO DO.

THERE ARE NO WARRANTIES , EXPRESSED OR IMPLIED, EXCEPT SUCH WARRANTIES AS ARE DEFINITELY SET FORTH HEREIN. ANY PART OR PARTS MANUFACTURED ALTERED OR REPAIRED OUTSIDE THE FACTORY WITHOUT WRITTEN APPROVAL FROM THE FACTORY SHALL VOID ALL WARRANTIES SET FORTH HEREIN. UNDER NO CIRCUMSTANCES WILL THE COMPANY BE CHARGED FOR LABOR TO INSTALL PARTS FURNISHED UNDER WARRANTY UNLESS IT AGREES IN ADVANCE TO DO SO. SHIPPING CHARGES ON WARRANTY PARTS SHALL BE FOR THE ACCOUNT OF THE CUSTOMER UNLESS THE COMPANY AGREES IN ADVANCE TO PAY THEM.

THE COMPANY SHALL IN NO EVENT BE HELD LIABLE FOR ANY CONSEQENTIAL DAMAGES OR OTHER DAMAGES OR DELAY CAUSED BY DEFECTIVE MATERIAL. EQUIPMENT AND ACCESSORIES, INCLUDING BEARINGS, NOT MANUFACTURED BY THE COMPANY ARE GAURANTEED ONLY TO THE EXTENT OF THE ORIGNAL MANUFACTURER'S GUARANTEE.

THE COMPANY RESERVES THE RIGHT TO IMPROVE IT PRODUCTS THROUGH CHANGES IN DESIGN OR MATERIAL WITHOUT BEING OBLIGATED IN INCORPRATE SUCH CHANGES IN PRODUCTS OR PRIOR MANUFACTURE.

2. ADJUSTMENT

THE FORWARD AND REVERSE CLUTCH ARE ADJUSTED EXTERNALLY WITH THE SCREWS WHICH PROJECT FROM BOTH SIDES OF THE CASE. ADJUST ONE CLUTCH AT A TIME. LOOSEN THE JAM NUT. TURN IN THE ADJUSTING SCREW A FRACTION OF A TURN IF MORE TENSION IS DESIRED. TURN OUT THE ADJUSTING SCREW FOR LESS TENSION. TEST THE ADJUSTMENT BY MOVING THE OPERATING LEVER TOWARDS IT RESPECTIVE ADJUSTING SCREW. TIGHTEN THE JAM NUT.

DO NOT TIGHTEN CLUTCHES EXCESSIVELY SINCE THIS ONLY INCREASES THE OPERATING EFFORT WITHOUT IMPROVING CLUTCH ACTION AND MAY RESULT IN DAMAGED BRAKE BANDS. OCCASIONALLY, DURING COLD WEATHER OPERATION, THE CLUTCHES MAY SLIP EVEN THOUGH CORRECTLY ADJUSTED, IN SUCH A CASE THE LUBRICANT MUST BE CHANGED TO A LIGHTER GRADE AS SPECIFIED IN LUBRICATION INSTRUCTIONS.

3. LUBRICATION

IMPORTANT: ALL GEARS ARE SHIPPED DRY FROM THE FACTORY. BE SURE TO ADD OIL BEFORE RUNNING. QUALITY OF OIL- USE A GOOD GRADE OF STRAIGHT MINERAL OIL-- SAE 30 ABOVE 32%F SAE 10 BELOW 32%F. EXAMPLES OF RECOMMENDED LUBE OILS; ESSO

LUBE MOTOR OIL; GULF LUBE MOTOR OIL; QUAKER STATE NON-DETERGENT MOTOR OIL (ML,MM), OR EQUIVALENT.

FILL UNIT WITH LUBRICATING OUL THROUGH THE BREATHER HOLE ON TOP UNIT OIL FLOWS FROM OIL LEVEL HOLE ON EISTHER SIDE. SOMETIMES OIL WILL FOLLOW THE INTERNAL PARTS AND OIL FLOW OUT THE OIL LEVEL HOLES BEFORE THE UNIT IS FILLED WITH OIL TO LEVEL HOLES. BE SURE UNIT IS FILLED TO OIL LEVEL HOLE.

OIL CHANGE

1. THE TRANSMISSSION SHOULD DRAINED AND REFILLED AFTER THE FIRST 30 HOURS OF OPERATION.
2. AFTER THIS A CHANGE OF OIL EVERY 100 HOURS OF OPERATION OR EVERY SIX MONTHS, WHICHEVER OCCURS FIRST, FOR UNITS OPERATING UNDER FAVORABLE CONDITIONS.
3. WHERE OPERATING CONDITIONS ARE SERVERE, SUCH AS RAPID RISE AND FALL IN TEMPERATURE OF THE GEAR CASE WITH ACCOMPANIED CONDESATION ON THE INSIDE WALLS AND RESULTING FORMATION OF SLUDGE, OR WHERE OPERATION IS IN MOIST OR DUSTY ATMOSPHERES, OR IN THE PRESENCE OF THE CHEMICAL FUMES, IT MAY BE NECCESARY TO CHANGE THE OIL AT INTERVALS OF ONE TO THREE MONTHS.

4. REPLACEMENT OF PARTS

SHOULD IT BECOME NECESSARY TO REPLACE ANY GEAR DUE TO WEAR OR BREAKAGE, THE MATING GEARS MUST BE CAREFULLY EXAMINED FOR WEAR OR CRACKS. IF ANY DOUBT EXISTS AS TO THE CONDITION OF THE MATING GEAR, THEY SHOULD BE REPLACED.

IN GENERAL, ALL GEARING IS SOLD COMPLETE WITH BEARING AND BUSHING INSTALLED.

THE SINTERED BUSHINGS AND NEEDLE BEARINGS USED IN THIS TRANSMISSION REQUIRE SPECIAL ASSEMBLY AND SIZING TOOLS AS SPECIFIED BY THE RESPECTIVE MANFACTURERS. THEREFORE, THE REPLACEMENT OF THESE PARTS SHOULD NOT BE ATTEMPTED UNLESS PROPER EQUIPMENT IS AVAILABLE.

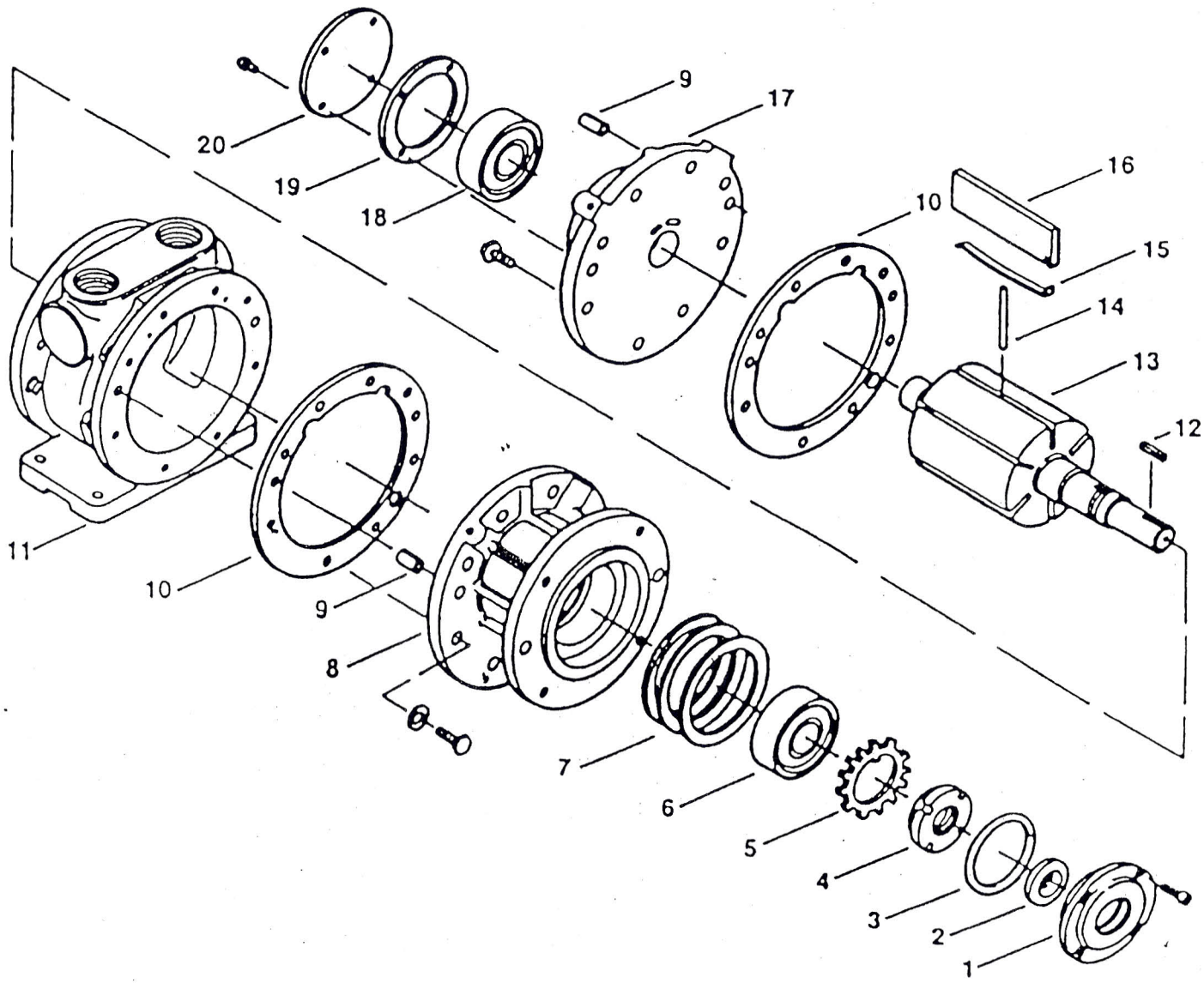
20
19
18
9
17
16
10
15
14
13
12
11
10
9
8
7
6
5
4
3
2
1

MODEL 700TWA PART LIST

REF #	PART #	DESCRIPTION	QTY. REQ.
1	PDPAD816	END CAP, DRIVE	1
2	PDPAC627	SEAL	1
3	PDPAD823	"O" RING	1
4	PDPAD784	LOCKNUT	1
5	PDPAD712	LOCKWASHER	1
6	PDPAB777A	BEARING,DRIVE END	1
7	PDPAD786	SPACER	REF.
8	PDPAC823	END PLATE, DRIVE	1
9	PDPDAB941A	DOWEL PIN	4
10	PDPAD788	BODY SPACER GASKET	2
11	PDPAD819	BODY	1
12	PDPAB136D	DRIVE KEY	1
13	PDPAE807	ROTOR ASSEMBLY	1
14	PDPAD822	PUSH PIN	3
15	PDPAD796A	VANE SPRING	6
16	PDPAD795	VANE SPRING	6
17	PDPAD821A	END PLATE, DEAD	1
18	PDPAD802	BEARING, DEAD END	1
19	PDPAG406	END CAP, GASKET	1
20	PDPAG405	END CAP,DEAD	1
	PDPK213	SERVICE KIT	1

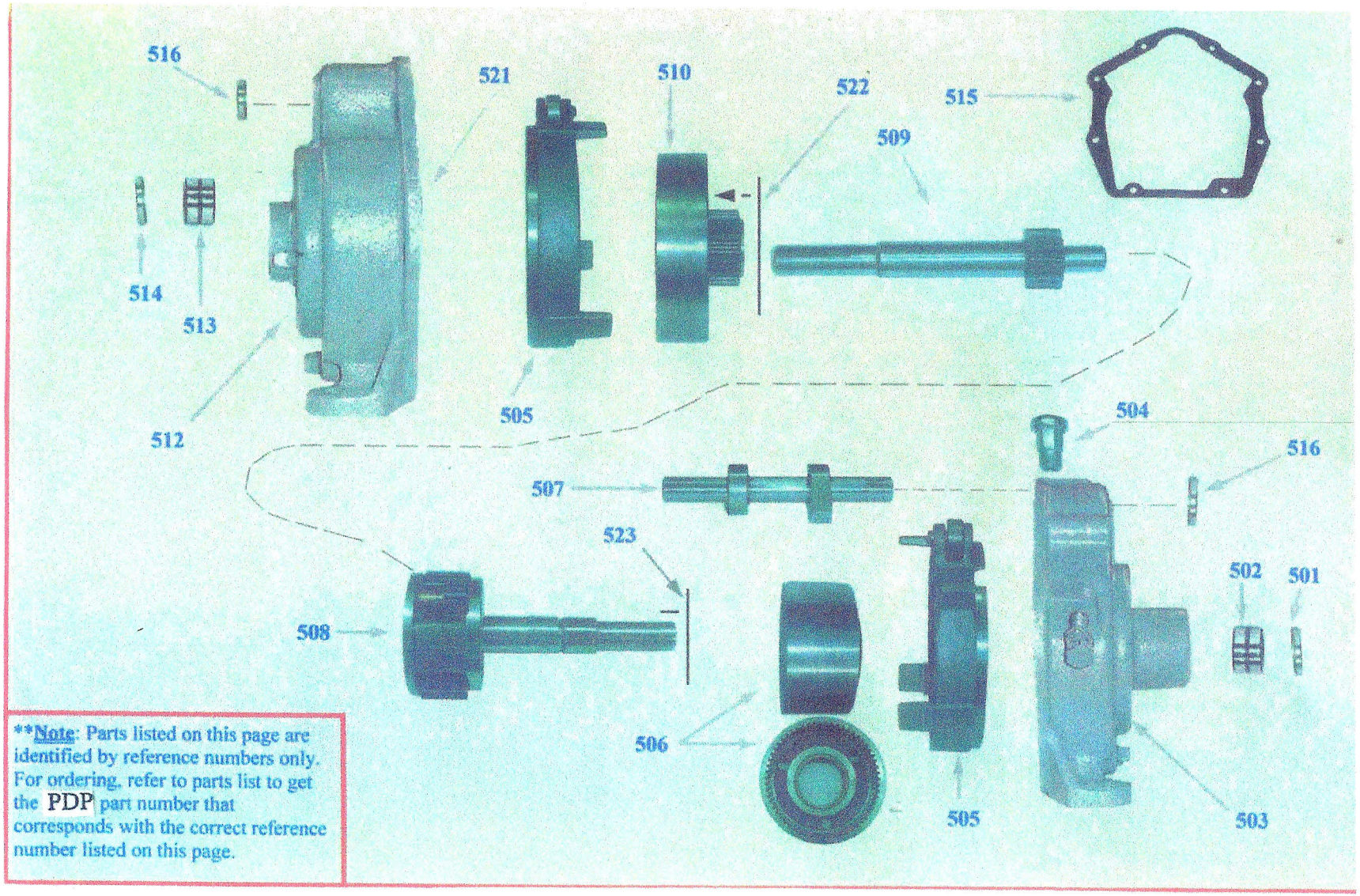

**Note: Parts listed on this page are identified by reference numbers only. For ordering, refer to parts list to get the PDP part number that corresponds with the correct reference number listed on this page.

Transmission Parts

REF #	PART NUMBER	DESCRIPTION	QTY.
501	**20186**	**OIL SEAL**	**1**
502	**10237-1**	**BEARING**	**1**
503	**30X-5106**	**OUTPUT HOUSING ASSEMBLY**	**1**
503A	6267	BUSHING	1
503B	4527	ADJUSTMENT BOLT	1
503C	1703	JAM NUT	1
503D	2101	PIPE PLUG	2
504	**31H-5105**	**BREATHER**	**1**
505	**5X-5104**	**BRAKE BAND ASSEMBLY**	**2**
506	**7AX-5106**	**GEAR DRUM ASSEMBLY**	**1**
506A	6268	BUSHING	1
507	**27AX-5106**	**CROSS SHAFT ASSEMBLY**	**1**
507A	(10)-5104	CAM	2
507B	27A-5106	CROSS SHAFT	1
508	3X-5104	GEAR CAGE ASSEMBLY	1
508A	48X-5106	OUTPUT SHAFT ASSEMBLY	1
508B	(3)-5104	GEAR COVER	1
508C	9AX-5103	SHORT PINION ASSEMBLY	2
508D	9X-5103	LONG PINION ASSEMBLY	2
508E	6271	BUSHING	2
508F	6273	BUSHING	1
509	**26-5109**	**INPUT SHAFT**	**1**
510	**8AX-5102**	**FLAT DRUM ASSEMBLY**	**1**
510A	8X-5102	GEAR ASSEMBLY	1
510B	26A-5101	BUSHING	1
510C	6272	BUSHING	1
510D	51042	SNAP RING	1
512	**30X-51027**	**INPUT HOUSING ASSEMBLY**	**1**
512A	4527	ADJUSTMENT BOLT	1
512B	1703	JAM NUT	1
512C	2101	PIPE PLUG	1
513	**10736**	**BEARING**	**1**
514	**2076**	**OIL SEAL**	**1**
515	**31A-5105**	**GASKET**	**1**
516	**20187**	**OIL SEAL**	**1**
520	**1228**	**KEY**	**2**
521	**8TF-5101**	**WASHER**	**1**
522	**8TR-5101**	**WASHER**	**1**
523	**8TR-5134**	**WASHER**	**1**